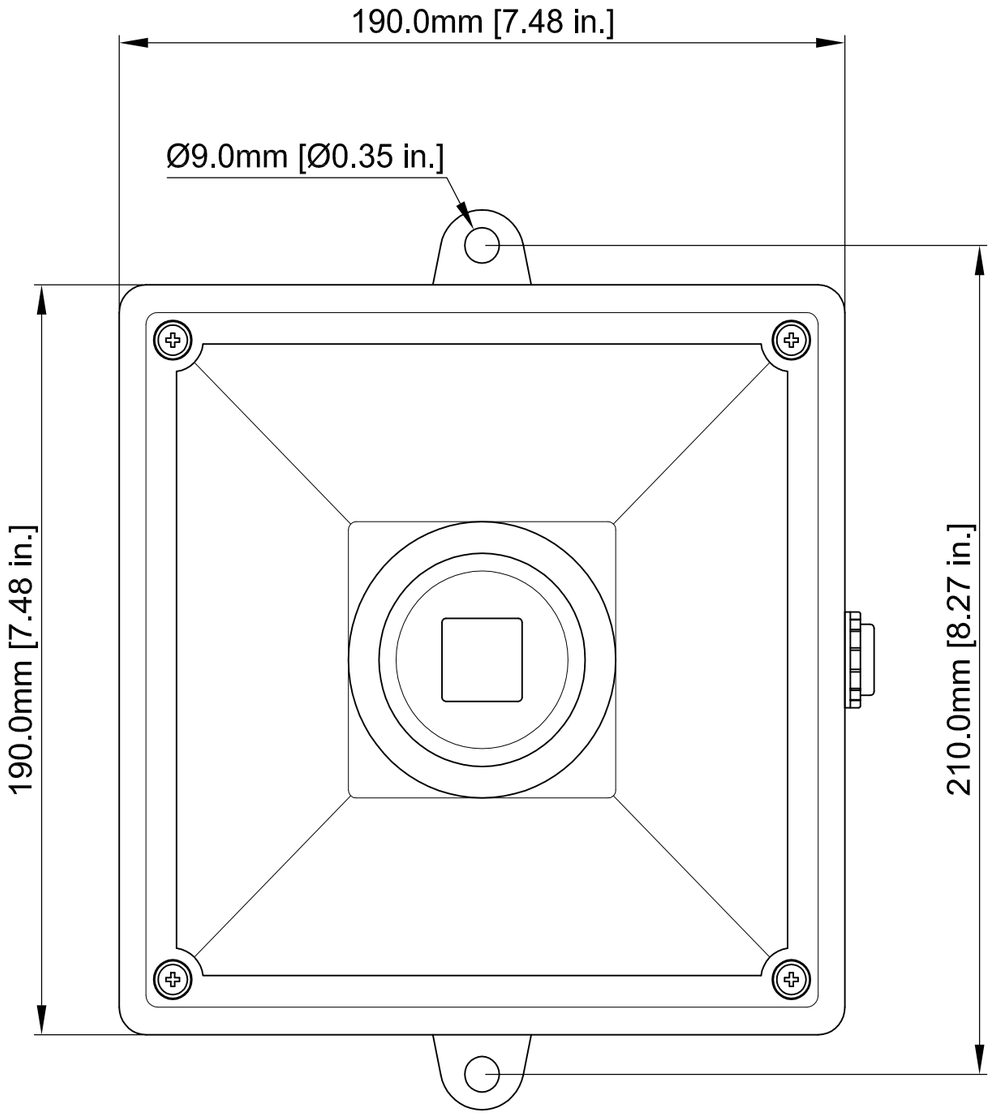

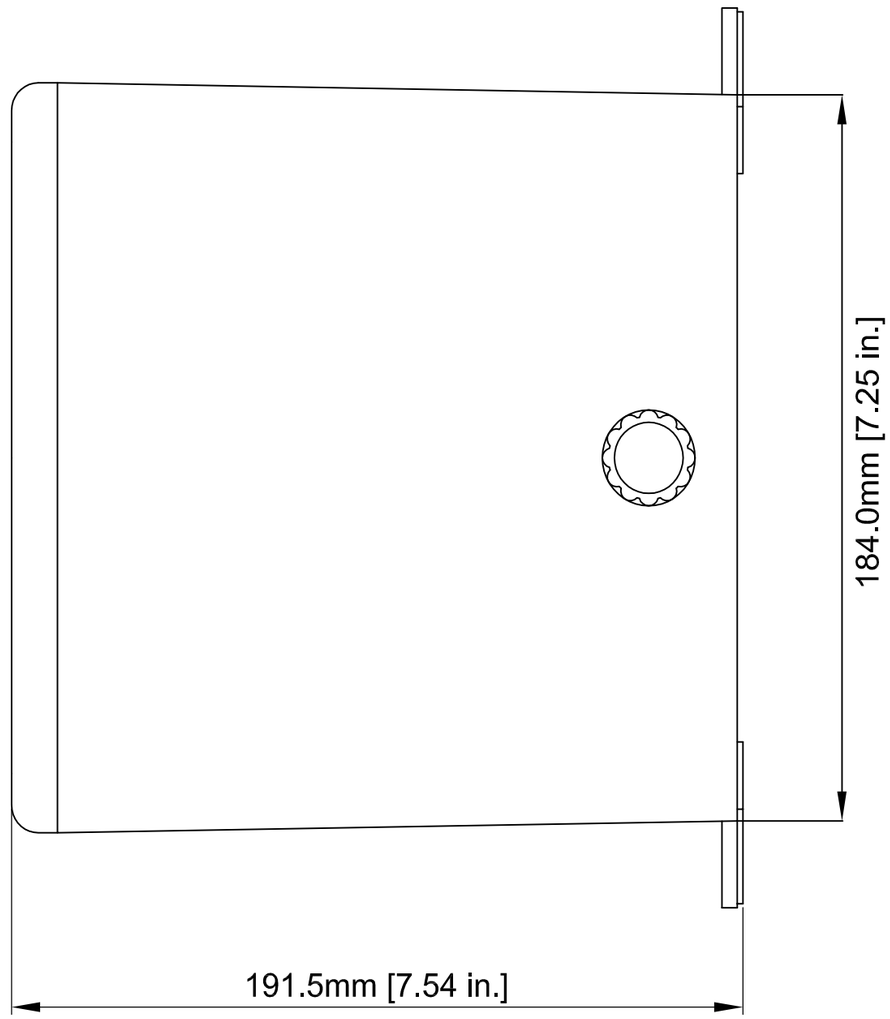

Note: Content is for general information only and is subject to change without notification.

THIS DRAWING IS CONFIDENTIAL AND COPYRIGHT PROPERTY OF THE MANUFACTURER AND MUST NOT BE COPIED OR LENT WITHOUT PERMISSION

Customer:	**Drawing:**	SK0110	REV: 01
Project:	**Title:**	**A121 Alarm Sounder**	
PO#		**A121 Sounder Range - Outline**	
Reference:			
Date:	**DATE:**	14/08/09	DWG BY: PRDCM

ProDetec
Measure . Prevent . Protect . Control

ProDetec Pty.Ltd.
P. +61 (02) 9620 8700
F. +61 (02) 9620 8755
E. info@prodetec.com.au
A. 17/38 Powers Rd,
Seven Hills NSW 2147
www.prodetec.com.au