StuvEx nv
Heiveldekens 8 - B-2550 Kontich - Belgium
Tel. +32-3-458 25 52 - Fax +32-3-458 25 27
E-mail: info@stuvex.be - www.stuvex.be

PROCESS

MILL

Description

Mills are used to reduce coarse products in size. Generally this is a matter of mechanically moving parts. But for particular applications, where very fine powder is needed, also air jet mills are used, in which the powder is ground down as the powder particles, due to the extreme air velocity, collide and rub with great velocity into each other. Sometimes the powder is removed directly from the mill by pneumatic transport. But often there is a mill bunker, equipped with an integrated filter, below the mill. In this bunker the milled product is received.

Mixtures

Obviously in a mill there is as a rule, a huge quantity of fine powder present. As there is also nearly always a very high turbulence, it would be very difficult to ignite such a mixture. In the case of explosions in mill systems, the mixture ignites usually in the mill bunker, or in the dedusting filter on this bunker.

Ignition sources

Ignition sources in a mill are mainly of mechanical origin: rubbing of mechanical parts, the breaking off of parts due to fatigue, or caused by stones or metal particles imported with the product. Another potential risk for ignition is obstruction by the product. In air jet mills also static electricity may not be underestimated.

Protection

Here also preventive measures are important: magnets and stone removing devices (or sieves) before the mill's inlet, vibration monitoring on the mill, together with control of the power used, and possibly temperature monitoring in critical spots. All metal parts must, of course, be correctly earthed.

As constructive protection of mills, often explosion resistant construction is applied. If the mill is placed on a receiving bin, whether or not combined with a filter, the probability of an explosion to occur increases considerably, as a result of which explosion protection becomes a must.
But the receiving bin and the filter are often not resistant to the maximum explosion pressure. In those cases either explosion suppression is applied, or explosion venting. If the milling system cannot be vented to the outside, also a bursting disc with integrated flame arrestor can be applied. As usually small, relatively strong, volumes are involved, this might be a very competitive solution.

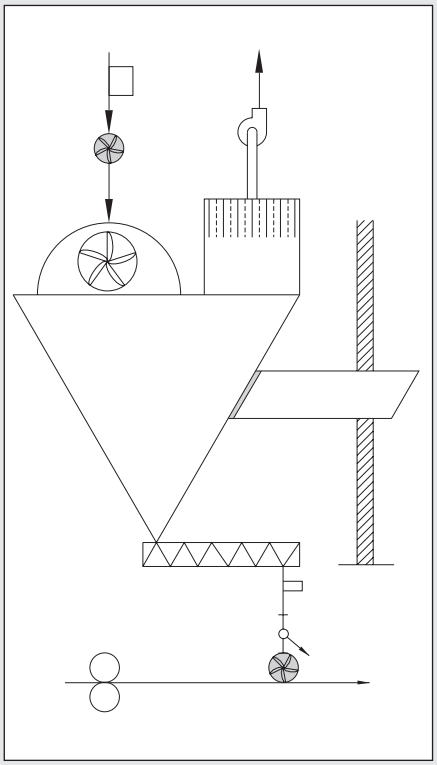

The various in- and outlets must also be taken into consideration:

- **The product inlet**: in those cases where the inlet is equipped with an explosion proof rotary valve or if a permanent presence of sufficient product in the inlet can be guaranteed to prevent explosion propagation, no supplementary protection is necessary.
- **The air inlet**: a lot of milling systems require, due to the milling process, air being sucked in. Often sucking in air from a safe place (from the outside) is not an option, as this air could be polluted and/or moist. For this reason the air is in most cases sucked in from within the building. In this case isolation is necessary. Here generally a Ventex valve is applied.
- **The air outlet**: if explosion suppression is applied, isolation here is generally not necessary, because the explosion will already be extinguished before it has been able to burn through the filter elements. In the case of explosion venting the fire will certainly burn through the filter elements. If the clean air is blown off to the outside in a safe place, no isolation is necessary. But if this is not the case, the latter is essential. In most cases a Ventex valve is applied.
- **The product outlet**: in those cases where the outlet is equipped with an explosion proof rotary valve or if a permanent presence of sufficient product in the outlet can be guaranteed to prevent explosion propagation, no supplementary protection is necessary.

Remark:

The fact that a mill is protected by explosion venting (or explosion suppression) is no guarantee that no smouldering particles could arrive from the mill into the transport system. For this reason it is in most cases advised to install ignition source detection on the mill systems exit, the latter combined with a possibility to stop/remove the smouldering material. If for this purpose an explosion resistant fast shutting valve is installed, the latter can also be used to stop the explosion. A frequent error in this matter is to position the ignition source detection straight under the mill. In this spot so many (small) sparks often arise that too many alarms are registered and the system is, as it is unworkable, switched off. Whereas the solution is usually to choose a somewhat greater distance from the mill, so only those sparks that are strong and threaten to be really dangerous, are detected.